Round 1 - Thursday, June 19, 2025

SHOTLINK

Blue Cross and Blue Shield of Kansas Wichita Open

Crestview Country Club

1 — Green Depth **23**

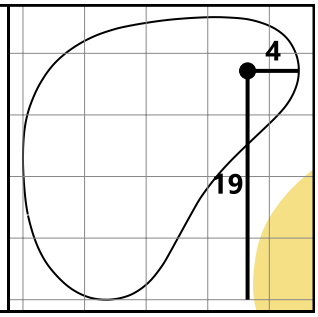

2 — Green Depth **31**

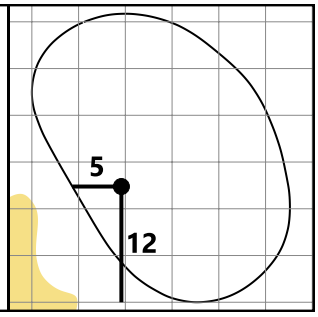

3 — Green Depth **27**

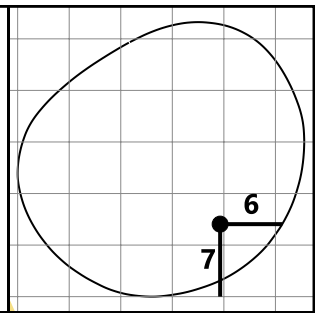

4 — Green Depth **24**

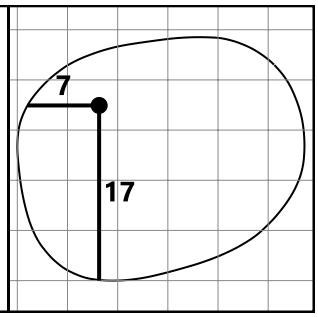

5 — Green Depth **16**

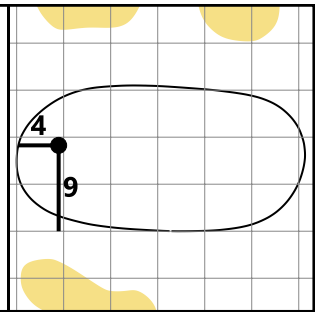

6 — Green Depth **27**

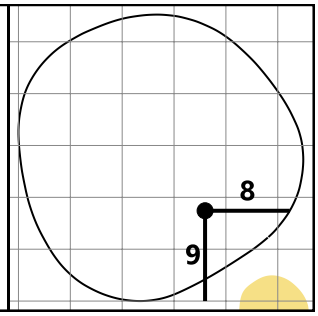

7 — Green Depth **32**

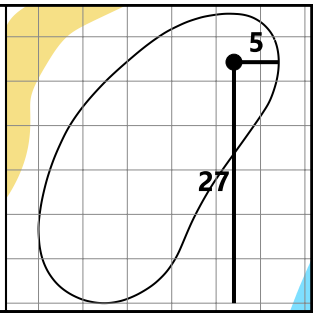

8 — Green Depth **29**

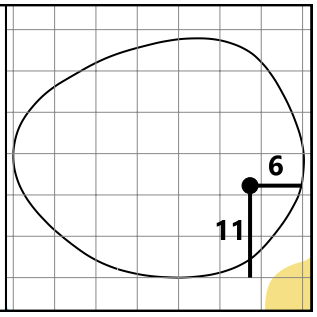

9 — Green Depth **29**

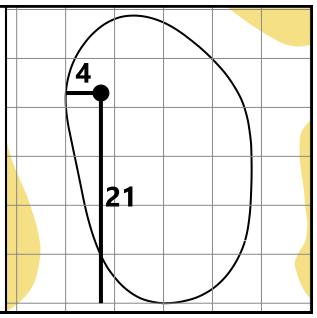

10 — Green Depth **28**

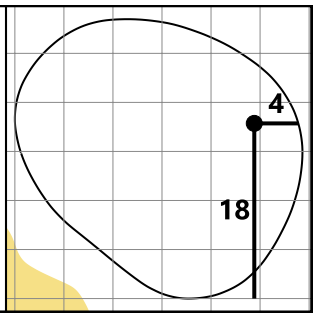

11 — Green Depth **26**

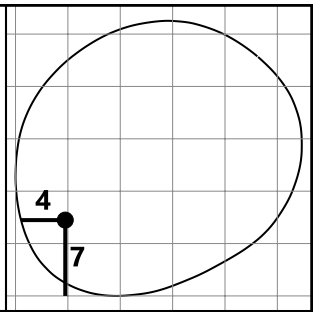

12 — Green Depth **30**

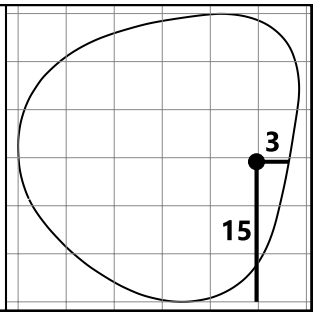

13 — Green Depth **26**

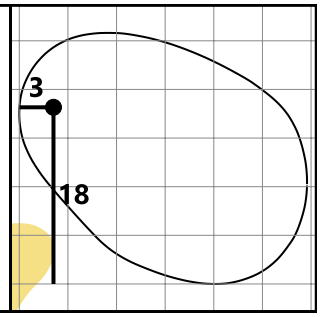

14 — Green Depth **21**

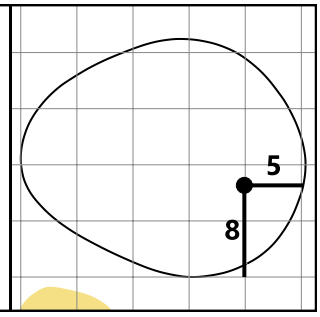

15 — Green Depth **24**

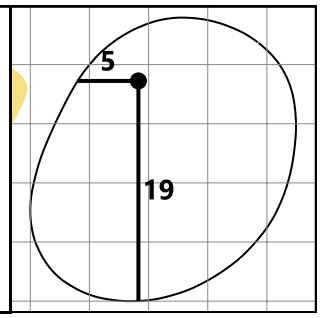

16 — Green Depth **25**

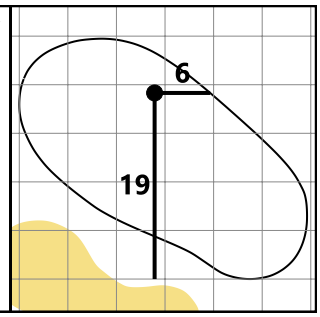

17 — Green Depth **23**

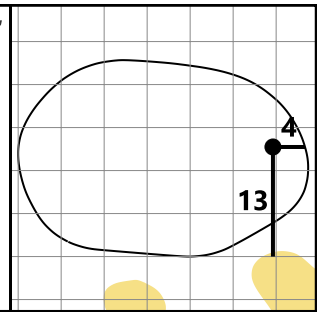

18 — Green Depth **25**

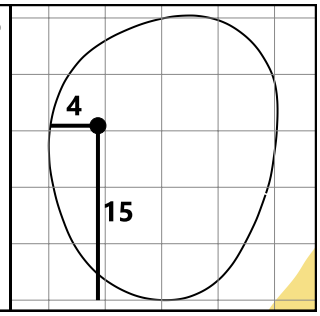

Each side of a complete square on the green represents 5 YARDS

Wednesday, June 18, 2025 9:11 AM